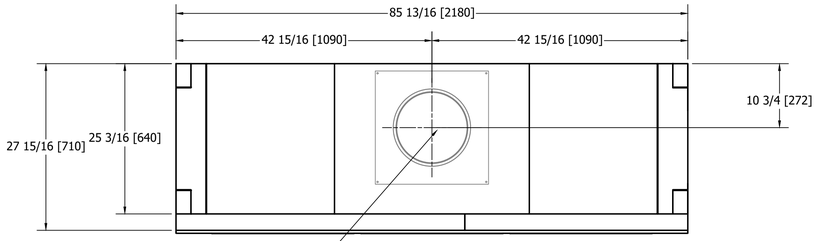

TOP VIEW

METAL-FAB 12" B-VENT PIPE (12" I.D./13" O.D.) W/ DOWN-DRAFT DIVERTER; X-VENTISO-MERIDIAN MAX LINEAR FAN SYSTEM REQUIRED.

FRAME OPENINGS TO 15" X 15" CLEAR TO MAINTAIN MIN. 1" CLEARANCE TO COMBUSTIBLES.

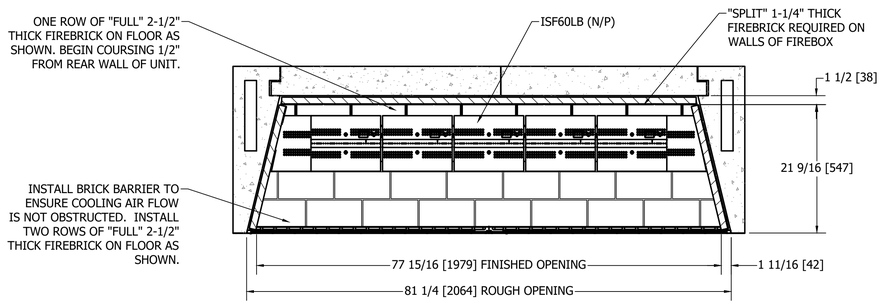

SECTION A-A

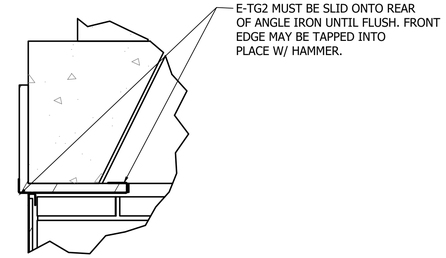

DETAIL B
SCALE 1 / 4

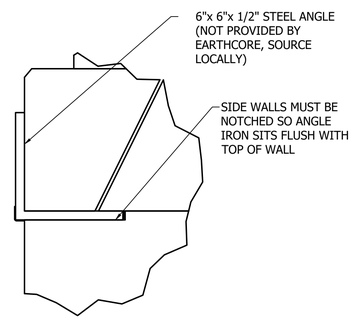

DETAIL A
SCALE 1 / 4

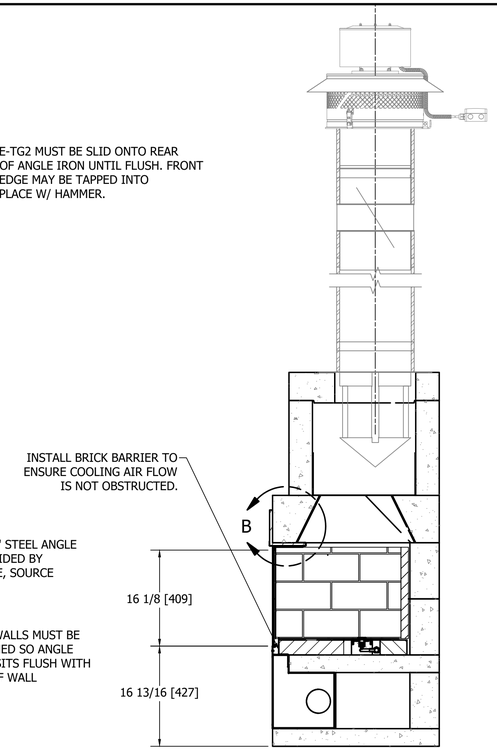

SECTION B-B

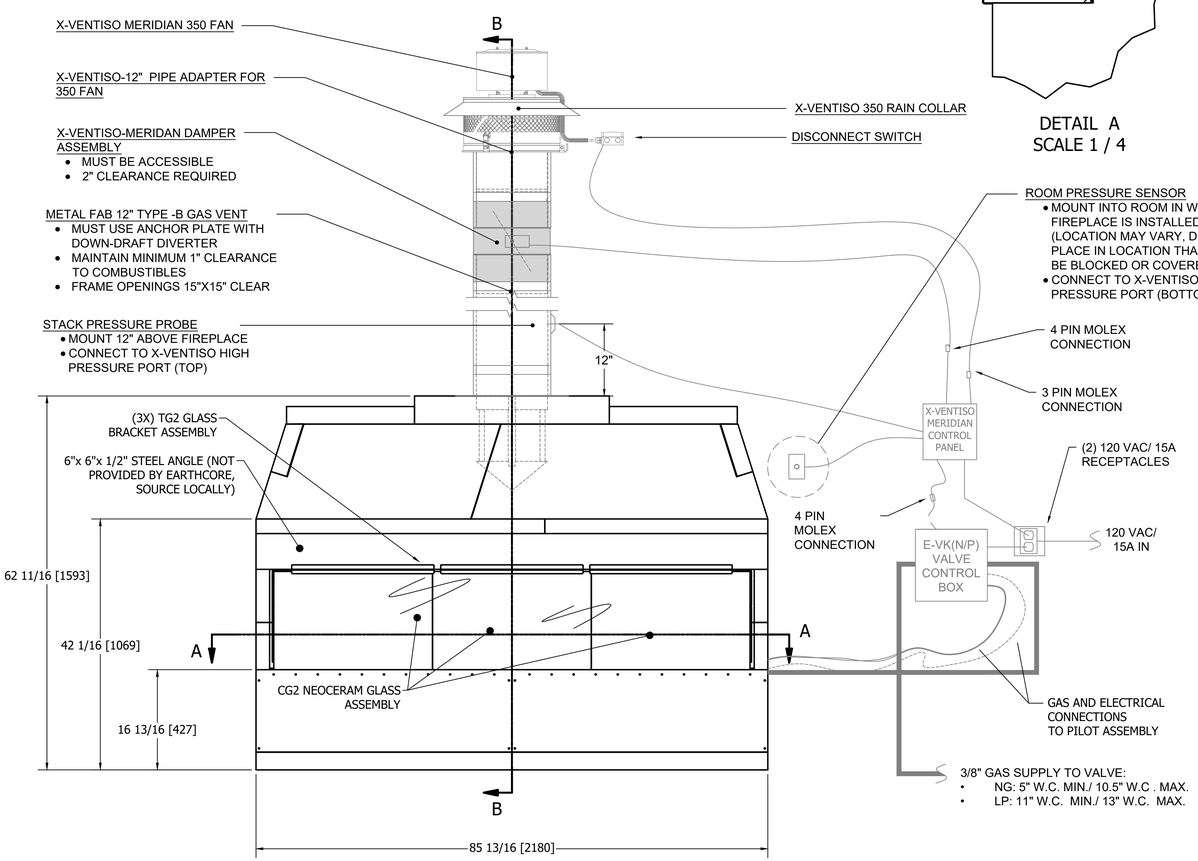

FRONT VIEW

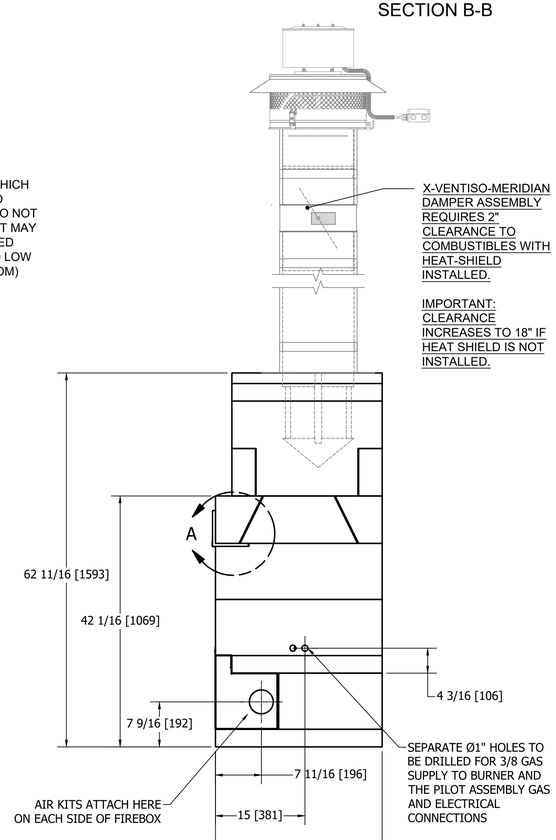

RIGHT-SIDE VIEW

PARTS LIST

PART NUMBER	QTY	DESCRIPTION
82L72	1	ISOKERN MAXIMUS LINEAR-72"
N/A	1	6"x6"x1/2" STEEL ANGLE (NOT PROVIDED BY EARTHCORE, MUST SOURCE LOCALLY)
ISF60LB (N/P)	1	60" LINEAR BURNER ASSEMBLY AND VALVE/CONTROLS (N: NATURAL GAS/ P: PROPANE)
GLK72	1	GLASS-FRONT KIT 72"
12MDD	1	METAL- FAB 12" B-VENT DOWN DRAFT DIVERTER
XV-MERDML	1	X-VENTISO-MERIDIAN MAX LINEAR FAN SYSTEM (CONSISTS OF THE FOLLOWING:) • X-VENTISO-MERIDIAN-350 FAN (XV-MERD-350) • X-VENTISO-35O FAN RAIN CAP (XV-350RC) • X-VENTISO-12" PIPE ADAPTER FOR 350 FAN (XV-350ADP12) • X-VENTISO-MERIDIAN DAMPER ASSEMBLY (XV-MERD-DAMP) • X-VENTISO-MERIDIAN ROOM PRESSURE PROBE/ COVER PLATE, STACK PRESSURE PROBE, TUBING (XV-MERD-PRESSKIT) • X-VENTISO-MERIDIAN CONTROL PANEL (XV-MERD-CTLR)

GENERAL NOTES

1. THE ISOKERN 72" MAXIMUS LINEAR FIREPLACE IS A TOP-VENTED, GAS ONLY FIREPLACE THAT IS APPROVED FOR USE ONLY WITH THE ISOFLAMES LINEAR BURNER SYSTEM AS SHOWN IN THIS DRAWING (ISF60LB(N/P)). USAGE OF ANY OTHER BURNER IN THIS FIREPLACE IS PROHIBITED AND WILL ABSOLVE EARTHCORE/ ISOKERN OR ANY DIVISION THEREOF FOR ANY INCIDENTAL OR CONSEQUENTIAL DAMAGES OR EXPENSES ARISING OUT OF THE USE OF THIS FIREPLACE.
2. THIS FIREPLACE'S BURNER SYSTEM (ISF60LB N/P) COMES WITH A GAS CONTROL VALVE ASSEMBLY (E-VK(N/P))THAT INCLUDES AN AUTOMATIC DRAFT AND SAFETY SYSTEM.
3. THIS APPLIANCE IS ONLY FOR USE WITH THE TYPE OF GAS INDICATED ON THE BURNER RATING PLATE. VERIFY GAS SUPPLY AND BURNER/ VALVE ARE OF SAME TYPE PRIOR TO INSTALLATION.
4. THE EXHAUST FLUE GASES ARE TO BE VENTED THROUGH THE TOP OF THE UNIT WITH 12" METAL-FAB UL LISTED B-VENT PIPING WITH DOWN-DRAFT DIVERTER. THIS TWELVE INCH (12") DIAMETER, DOUBLE WALL B-VENTING SYSTEM IS NOT SUPPLIED BUT IS REQUIRED FOR PROPER OPERATION.
5. THE GLASS-FRONT VERSION OF THE 72" MAXIMUS LINEAR IS ACHIEVED BY INSTALLATION OF THE GLASS-FRONT KIT THAT MATCHES YOUR FIREPLACE MODEL (GLK72). GLASS FRONT KIT SHALL BE INSTALLED AS DETAILED IN THE INSTRUCTION MANUAL.
6. NOT REPRESENTED ON THIS DRAWING, BUT MANDATORY FOR OPERATION ARE TWO Ø4" COOLING AIR KITS. THIS AIR KITS ARE PART OF THE GLASS-FRONT KIT AND ARE UTILIZED TO PROVIDE COOLING AIR TO THE GLASS. COOLING AIR KITS SHALL ORIGINATE FROM OUTSIDE AIR.
7. THE MAXIMUS LINEAR SERIES FIREPLACES SHALL BE INSTALLED WITH THE MINIMUM CLEARANCES TO COMBUSTIBLES AS LISTED BELOW. WARNING: DO NOT OPERATE A FIREPLACE EQUIPPED WITH GLASS-FRONT KIT WITHOUT GLASS PANELS INSTALLED. THIS WILL INVALIDATE THE CLEARANCES LISTED BELOW, AND THOSE OF THE OPEN-FRONT SHALL APPLY:
   - UNIT FRONT: 0"
   - SIDES AND REAR: 1.5"
   - COMBUSTIBLE SHEATHING ABOVE OPENING TOP: OPEN FRONT-8"/ GLASS FRONT-0"
   - SHEATHING OR TRIM TO OPENING SIDES: OPEN FRONT-8"/ GLASS FRONT-0"
   - MANTEL ABOVE OPENING: OPEN FRONT-12"/ GLASS FRONT-0"
   - OPENING TO SIDEWALLS: OPEN FRONT-24"/ GLASS FRONT-24" RECOMMENDED
   - HEARTH EXTENSION BEYOND FRONT: OPEN FRONT-20"/ GLASS FRONT-NOT REQUIRED
   - HEARTH EXTENSION BEYOND SIDES (FINISHED): OPEN FRONT-12"/ GLASS FRONT- NOT REQUIRED
   - COMBUSTIBLE FLOOR: 0" (MUST USE ISOKERN BASE PLATE, "FULL" 2-1/2" FIREBRICK, AND ISOFLAMES LINEAR BURNER/ VALVE)
   - INSULATION FROM FIREBOX (UNSHIELDED): 3"
8. IT IS CRITICAL IN PLANNING FOR THE INSTALLATION THAT THE SURROUND MATERIAL DOES NOT COVER THE GLASS AND ALLOWS FOR ITS REMOVAL FOR SERVICING/ CLEANING OF THE BURNER SYSTEM.
9. THIS DESIGN REQUIRES MECHANICAL VENTILATION ASSISTANCE USING THE X-VENTISO-MERIDIAN MAX LINEAR FAN SYSTEM FOR GAS-ONLY OPERATION. VENT PATHS ARE LIMITED TO A MAXIMUM OF TWO 90° ELBOWS AND MAY TERMINATE EITHER VERTICALLY OR HORIZONTALLY. REFER TO INSTALLATION MANUAL FOR MAXIMUM VENT LENGTHS AND ADDITIONAL INFORMATION REGARDING FLUE RUNS.
10. ENSURE TWO 120VAC/ 15A OUTLETS ARE PROVIDED FOR GAS VALVE AND X-VENTISO-MERIDIAN CONTROL PANEL IN ACCORDANCE WITH INSTALLATION MANUAL. CONTROLS SHALL BE LOCATED IN ACCESSIBLE LOCATION.
11. ALL ACCESSORIES/ EQUIPMENT INSTALLED WITH THIS FIREPLACE TO BE INSTALLED ACCORDING TO MANUFACTURER'S SPECIFICATIONS.
12. INSTALL AND SUPPORT B-VENT PIPE TO ALL MANUFACTURER SPECIFICATIONS. ENSURE MIN.1" CLEARANCE TO COMBUSTIBLES IS KEPT AT ALL TIMES.
13. IMPORTANT: THE X-VENTISO-MERIDIAN DAMPER ASSEMBLY REQUIRES 2" CLEARANCE TO COMBUSTIBLES WITH HEAT SHIELD INSTALLED. IF HEAT SHIELD IS NOT INSTALLED, THIS CLEARANCE INCREASES TO 18".
14. DRAWINGS ARE FOR DESIGN PURPOSES ONLY AND ARE THE SOLE PROPERTY OF EARTHCORE INDUSTRIES. ANY REPRODUCTION OR UNAUTHORIZED USE IS STRICTLY PROHIBITED.
15. EARTHCORE/ ISOKERN OR ANY DIVISION THEREOF SHALL NOT BE HELD LIABLE FOR ANY INCIDENTAL OR CONSEQUENTIAL DAMAGES OR EXPENSES ARISING OUT OF THE USE OF THE FIREPLACES OR CHIMNEY SYSTEMS.
16. ALWAYS CHECK LOCAL BUILDING CODES GOVERNING FIREPLACES AND FIREPLACE INSTALLATIONS.

ISOMETRIC VIEW (N.T.S.)

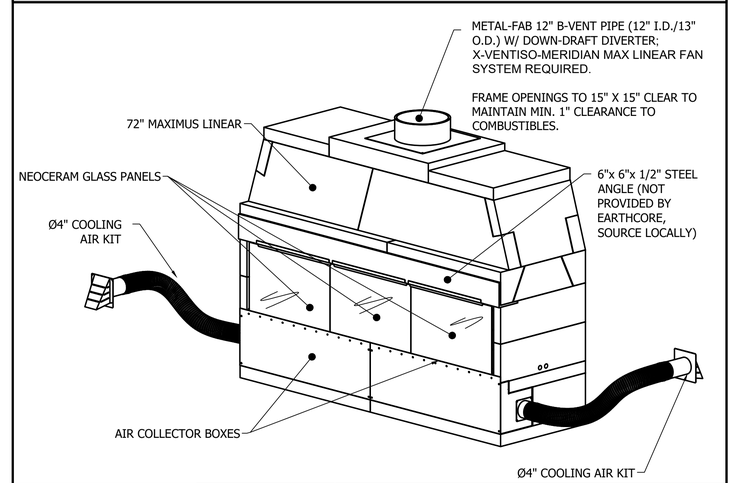

earthcore® INDUSTRIES, L.L.C.

UNLESS OTHERWISE STATED, ALL DIMENSIONS ARE IN INCHES

UNSPECIFIED TOLERANCES			THIRD ANGLE PROJECTION
ANG.	A.	±	
LIN.	X	±	
	.XX	±	
	.XXX	±	

PROJECT: 6' MAXIMUS LINEAR W/ GLK

DESCRIPTION: FIREPLACE CONSTRUCTION DOCUMENT W/ X-VENTISO-MERIDIAN

MATERIAL: E.C. PUMICE MIXTURE

DRAWN:	DATE:	SIZE:	SCALE:	DRAWING #:	REV:
K.B.H	8/20/2025	D	1"=1'-0"	82L72-GLK	D
APPROVED:	DATE:		DO NOT SCALE	SHEET # 1 OF 2	

Rough Framing Dimensions

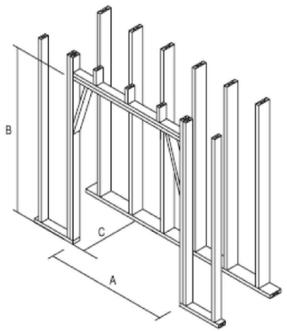

TYPICAL INSTALLATION FRAMING DIMENSIONS			
Model #	**A** - Width	**B** - Height	**C** - Depth
82L48	56"	64-1/2"	29-1/2"
82L60	77"	64-1/2"	29-1/2"
82L72	89"	64-1/2"	29-1/2"
82L96	112"	64-1/2"	29-1/2"
82L120	135"	64-1/2"	29-1/2"

NOTES:

1) **"B"** includes the required 3" thick base plate.
2) If the Maximus Linear installation is to be elevated, this "Raised hearth" installation will require additional rough opening height at **"B"** that is equal to the height of the raised hearth.
3) Rough framing dimension for depth "C" allows for the required 1-1/2" clearance at the back of the fireplace. Note that this 29-1/2" is typically used on interior walls that do not have insulation present.

IMPORTANT: Unless the insulation on an exterior wall is installed behind plywood sheathing, a depth of 31" is often used to account for the required 3" clearance to insulation. Even with this increased distance, the installer should be aware that spray foam insulation may expand past the face of the stud wall and will require trimming prior to firebox installation to maintain the required 3" clearance. It is important that any insulation that is not installed behind sheathing shall be installed in such a manner that it cannot fall on the firebox and encroach on this clearance.

Firebrick Installation - Maximus Linear with Glass-Front Fireplace

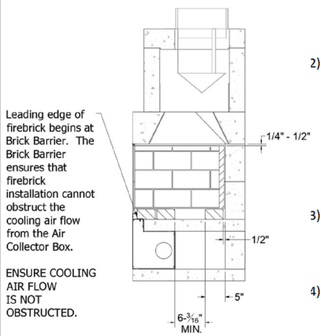

1) Starting approximately 1/2" from the rear of the firebox, lay one course of "full" sized firebrick on floor. Ensure a gap of approximately 1/2" is kept between firebrick and sidewall to allow for expansion.
2) Lay two courses of "full" sized firebrick so that the leading edge of the coursing begins at the Brick Barrier that is affixed to the Air Collector Box (s). Ensure a gap of approximately ½" is kept between firebrick and sidewall to allow for expansion.

   IMPORTANT: The Brick Barrier prevents installation of firebrick in a manner that may block the cooling air vents. **DO NOT BLOCK THE COOLING AIR VENTS.**
3) Apply "split" firebrick to the rear wall of the unit. Ensure approximately 1/2" gap is kept between firebrick and sidewall, as well as an 1/4" gap is kept between firebrick and damper beam assembly to allow for expansion.
4) Starting at the front edge of the unit's sidewall, apply "split" firebrick to the side wall of the unit. Ensure approximately ¼" gap is kept between firebrick and damper beam/damper block assembly to allow for expansion.
5) Repeat on opposite side wall.

IMPORTANT:
Ensure that the required holes for the Isoflames Linear burner's 3/8" gas supply line and pilot assembly gas and electrical connections are drilled prior to firebrick installation. **DO NOT COVER THESE AREAS WITH FIREBRICK**!

Clearance to Combustible Trim

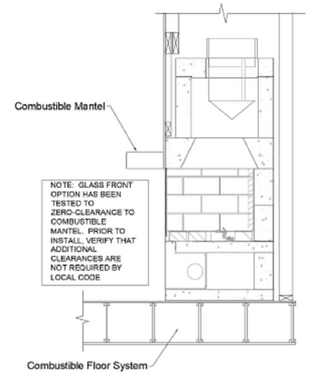

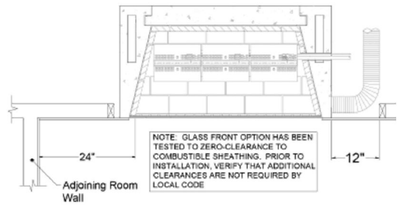

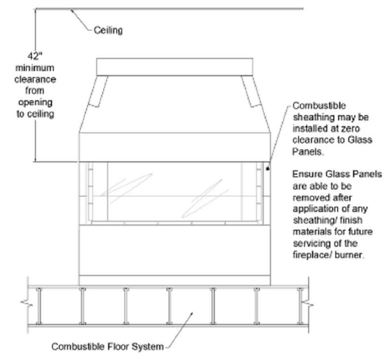

NOTE: "Clearance to Combustible Trim" are those distances required to ensure that a fireplace mantel or facing will not catch fire. In most cases the distances should also be adequate to prevent any discoloration or warping due to heat. However, each installation presents a unique and completely different set of circumstances involving many variables.

These variables include paint or finish composition, previous exposure to heat, methods and quality of construction, air flow patterns, etc. Because of these variables, the manufacturer does not guarantee that heat -warping or discoloration will never occur.

MANTEL AND MANTEL SHELF CLEARANCES:
Maximus Linear with Glass Fronts units are designed to be installed so that the rough front face(s) of the Isokern firebox and sits flush with the face of the rough framing members that create the room wall finish.

The Maximus Linear with Glass Front has been tested to zero-clearance to combustible mantel and sheathing. The zero-clearance rating requires the glass panels to be installed during fireplace operation. Do not operate with the glass panels removed. Prior to installation, verify that additional clearances are not required by local code.

ADJOINING WALLS:
It is recommended that adjoining room walls to the Isokern fireplace installation not be closer than twenty-four inches (24") to the finished fireplace opening **.**

CEILINGS:
The minimum clearance from the top of the fireplace opening to a ceiling is forty-two inches (42").

Maximus Linear Series (Gas Only) Specifications

MANUFACTURER:
ISOKERN Fireplace and Chimney Systems, North America distribution by Earthcore Industries, LLC, Jacksonville, Florida (Telephone 800-642-2920)

PRODUCT DESCRIPTION:
Modular refractory masonry precast fireplace and chimney system.
1. Designed for field assembly as a fireplace and B-vent chimney system.
2. All interlocking parts necessary for assembly of a complete firebox, smoke dome, and Glass-Front Kit (Glass-Front Kit is installation option of the Maximus Linear series and is not required for all installations).
3. Isoflames Linear Burner and Valve system (per installation manual)
4. 12" B-vent chimney flue (per installation manual)
5. Mechanical draft system (per installation manual)

MATERIALS:
A. Light weight concrete of a proprietary mixture of Icelandic volcanic aggregate and aluminum cement for precast firebox, chimney block and flue liner components.
   1. Compressive Strength: Firebox Block: 972 psi.
B. Premixed (dry) EARTHCORE ADHESIVE.
   1. Tensile strength: 807 psi; Compressive strength: 2460 psi.
   2. Tested per ASTM C109, ASTM C307, and ANSI 118.4.
C. Standard 1-1/8" high temperature refractory brick to line firebox interior walls.
D. Standard 2-1/2" high temperature refractory brick to line firebox floor.

INSTALLATION:
A. Reference manufacturer's installation instructions for standard configurations, weights, sizes and installation details.
B. Suitable masonry foundation or structural wood floor system must be provided.
C. Non combustible hearth extensions must be provided.
D. Unit to be assembled on site per manufacturer's illustrated instructions.
   1. Premixed EARTHCORE ADHESIVE is used at all joints between components.
   2. Firebox to be lined with a minimum 1-1/8" rated firebrick on the walls and 2-1/2" rated firebrick on floor (trough created in firebrick floor for Isoflames Linear Burner installation).
   3. A 1-1/2" minimum clearance to combustible materials is required for firebox side and back-walls.
   4. A 3" minimum clearance to insulation required.
E. Shall be installed only with the approved Isoflames Linear Burner and Valve System as detailed in the instruction manual.
F. Installation must use 12" B-vent pipe as detailed in the instruction manual (Anchor Plate with Down-Draft Diverter required).
G. Only approved mechanical draft systems shall be utilized, as detailed in the instruction manual.

CERTIFICATION:
A. PFS Corporation, PFS Report No. F19-161
B. Meets or exceeds ANSI Z 21.50-2014, CSA 2.22-2014

CODE COMPLIANCE:
A. ICC NO. ESR 4873

NOTE: Isokern components are a natural material and slight variations in dimensions may occur. These should be no more than 1/8".

WEIGHTS AND LOAD CALCULATIONS

Total dead load amounts include (but are not necessarily limited to) the following items and their corresponding weight estimates as listed below:

1) Isokern Maximus Linear w/ Glass Front unit weights:
   a) Maximus Linear w/ Glass Front - 48: 1,652 lbs. (no burner, flue, accessories)
   b) Maximus Linear w/ Glass Front - 60: 2,204 lbs. (includes steel angle; but no burner, flue, accessories)
   c) Maximus Linear w/ Glass Front - 72: 2,578 lbs. (includes steel angle; but no burner, flue, accessories)
   d) Maximus Linear w/ Glass Front - 96: 3,132 lbs. (includes steel angle; but no burner, flue, accessories)
   e) Maximus Linear w/ Glass Front - 120: 3,844 lbs. (includes steel angle; but no burner, flue, accessories)
2) Approximate weight of glass media: 100 lbs.
3) Fire brick and Adhesive: 350 lbs. - 1800 lbs. depending on brick size and pattern
4) Facing material: per general contractor
5) B-Vent metal flue: per manufacturer and installation requirements

The floor area for each model is as follows:
- Maximus Linear w/ Glass Front - 48: @ 53" x 28" = 10.3 sq. ft.
- Maximus Linear w/ Glass Front - 60: @ 73-1/2" x 28" = 14.3 sq. ft.
- Maximus Linear w/ Glass Front- 72: @ 85-3/4" x 28" = 16.67 sq. ft.
- Maximus Linear w/ Glass Front- 96: @ 108-1/4" x 28" = 21.04 sq. ft.
- Maximus Linear w/ Glass Front - 120: @ 131-3/4" x 28" = 25.62 sq. ft.

Earthcore is not responsible for structural floor support details for this fireplace system. Unless otherwise noted all floor framing drawings in this manual are merely illustrations to indicate the presence of an underlying floor system. Consult your local structural engineer for proper floor system design, sizing, and specifications.

PFS US
PFS REPORT NO. F19 - 161

ISOKERN LINEAR GAS FIREPLACE
LISTED VENTED GAS FIREPLACE PER ANSI Z21.50 - 2019
CSA 2.22-2019

ISOKERN
MADE IN THE USA
CHESAPEAKE, VA 23323

NOT FOR USE WITH SOLID FUEL

SERIAL NO: 1000001

MODEL # ☐82L48 ☐82L72 ☐82L60 ☐82L96 ☐82L120

FOR USE WITH PROPANE (LP) OR NATURAL GAS, SEE GAS IDENTIFYING TAG ON BURNER
☐ 82L48 NATURAL GAS MAX BTU 54,000; PROPANE MAX BTU 48,000
☐ 82L60 NATURAL GAS MAX BTU 72,000; PROPANE MAX BTU 64,000
☐ 82L72 NATURAL GAS MAX BTU 90,000; PROPANE MAX BTU 80,000
☐ 82L96 NATURAL GAS MAX BTU 108,000; PROPANE MAX BTU 96,000
☐ 82L120 NATURAL GAS MAX BTU 110,000; PROPANE MAX BTU 105,000

*See Burner Rating Plate For Additional Information
MANIFOLD PRESSURE: PROPANE (LP): 10" WATER COLUMN; NATURAL GAS: 3.5" WATER COLUMN
MINIMUM PERMISSIBLE GAS SUPPLY PRESSURE FOR PURPOSE OF INPUT ADJUSTMENT:
PROPANE (LP): 11" WATER COLUMN; NATURAL GAS: 5" WATER COLUMN

ELECTRICAL RATING:
UNIT: ELECTRONIC
1 PH
60 HZ
120 VOLTS
LESS THAN 5 AMPS

CLEARANCE TO COMBUSTIBLES:	Open Front Only	Glass Front Only
UNIT FRONT	= 0in	= 0in
UNIT SIDES AND REAR	= 1.5in.	= 1.5in.
COMBUSTIBLE SHEATHING ABOVE OPENING	= 8in	= 0in
TOP SHEATHING OR TRIM TO OPENING SIDES	= 8in	= 0in
MANTEL ABOVE OPENING	= 12in.	= 0in
INSULATION FROM FIREBOX	= 3in.	= 3in

CAUTION: THIS APPLIANCE IS ONLY FOR USE WITH THE TYPE OF GAS INDICATED ON THE RATING PLATE. THIS APPLIANCE IS NOT CONVERTIBLE FOR USE WITH OTHER GASES. UNLESS A CERTIFIED KIT IS USED.

This appliance must be installed in accordance with local codes, if any, if none, follow the current ANSI Z223.1/NFPA 54 or CSA B149.1

EARTHCORE INDUSTRIES HEADQUARTERS
JACKSONVILLE, FL 32256

E-VK(N/P) VALVE LOCATION

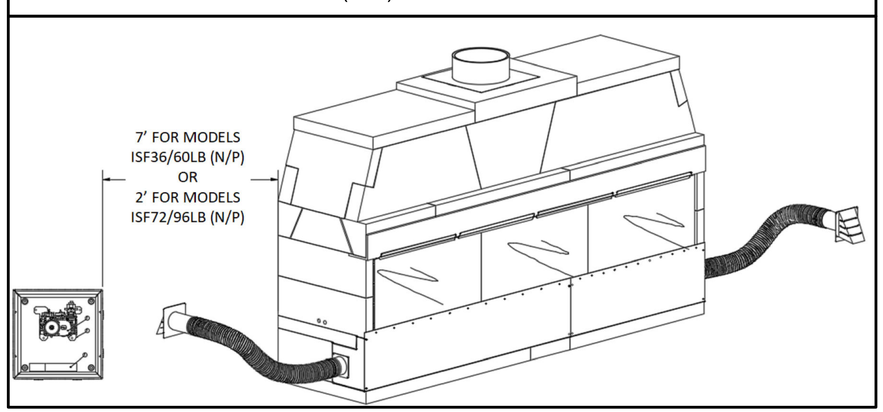

SCAN QR CODE FOR LATEST INSTALLATION MANUALS

earthcore® INDUSTRIES, L.L.C.

UNLESS OTHERWISE STATED, ALL DIMENSIONS ARE IN INCHES

UNSPECIFIED TOLERANCES		
ANG.	A	±
LIN.	X	±
	.XX	±
	.XXX	±

THIRD ANGLE PROJECTION

PROJECT: 6' MAXIMUS LINEAR W/ GLK
DESCRIPTION: GENERAL INFORMATION AND SPECIFICATIONS
MATERIAL:
DRAWN: K.B.H | DATE: 8/20/2025
APPROVED: | DATE:
SIZE: D | SCALE: N.T.S (DO NOT SCALE) | DRAWING #: 82L72-GLK | REV: D
SHEET # 2 OF 2